Pitot tube
Type S

CE

Presentation

KIMO offers a wide range of high-quality and accurate **Pitot tubes**, as per the ISO 10780 norm.

These **Pitot tubes** when being connected to a differential column / or needle / or electronical manometer, can measure the dynamic pressure of a moving fluid in a duct, and then, can deduct its air velocity in m/s and its airflow in m3/h.

These **Pitot tubes** are used in HVAC field, vacuum cleaning and pneumatical transport. They are mainly dedicated to measure hot and particle-charged air, and also high air velocity.

Features

Norm.....ISO 10 780

Coefficient.....0,84±0,01

Accuracy.....More than 4 %, for a ± 15° alignment to the fluid flow

Quality.....stainless steel 316 L

Working temperature.....from 0 to 1000 °C

- The extent error of an air velocity or airflow measurement with a KIMO Pitot tube remains inferior to 3%, when being carried out as per the ISO 10 780 norm.
- To meet ISO 10 780 norm's requirements, it is recommended to carry out a calibration of the Pitot tube, in order to determine its exact coefficient.

Dimensions

Ø 8 mm	TPS-08-500-T-	500 mm
	TPS-08-1000-T	1000 mm
	TPS-08-1500-T	1500 mm
	TPS-08-2000-T	2000 mm
	TPS-08-2500-T	2500 mm
	TPS-08-3000-T	3000 mm

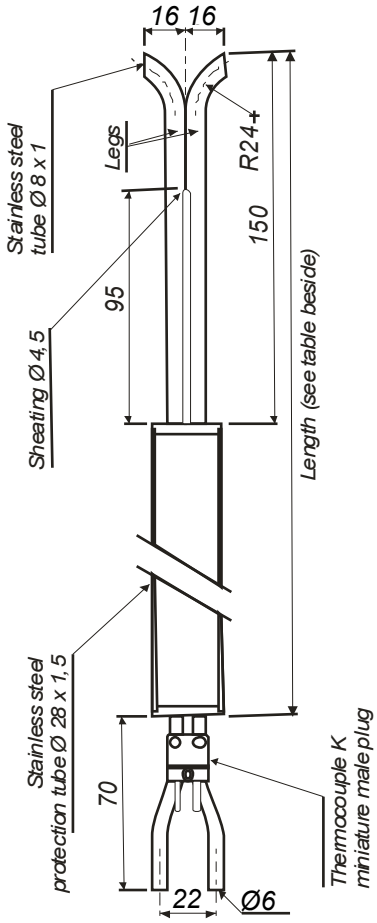

Operating

The **Pitot tube** must be introduced perpendicularly into the duct, in several points pre-determined.
The holes must be made in proper alignment to the line of the air or gas flow.
Compared to the **Pitot tube L**, the **Pitot tube S** is much more sensitive to wrong alignments.

Taking into account that the **Pitot tube** is symmetrical, it is no use to identify the 2 legs. However, it is important to connect the instrument as follows :

- the leg facing the air flow must be connected to the + sign of the manometer
- the leg opposite to the air flow must be connected to the - sign of the manometer.

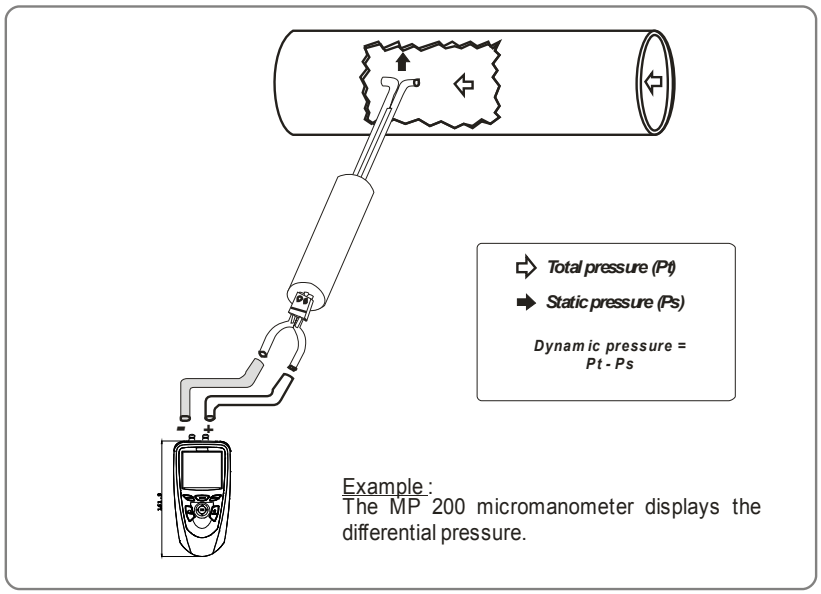

With the dynamic pressure in mm CE or in Pa, we can calculate the air velocity in m/s, with the simplified BERNOULLI formula :

V in m/s at 20 °C : $\mathbf{K} \times \sqrt{\frac{2}{\delta} \times \Delta \mathbf{P} \text{ in Pa}}$

Formula to get the velocity, with temperature balancing of the airflow :

$$\mathbf{V} \text{ in m/s} = \mathbf{K} \times \sqrt{\frac{574{,}2\ \Theta + 156842{,}77}{Po}} \times \sqrt{\Delta \mathbf{P} \text{ in Pa}}$$

With

Po = barometric pressure in PA
Θ = temperature in °C
K = coefficient of Pitot tube
δ = volumic mass

Accessories

- Extension cable for thermocouple K class 1 :
- Clamping blocks made of cast iron 
- Tubes 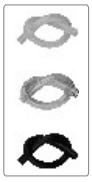

www.kimo.fr

EXPORT DEPARTMENT
Tel : + 33. 1. 60. 06. 69. 25 - Fax : + 33. 1. 60. 06. 69. 29
e-mail : export@kimo.fr

Distributed by :